ROCK DRILLING

TOOLS AND CONSUMABLES

UNMATCHED PERFORMANCE, RELIABILITY SOLUTIONS



SAMPOKO

PAGE OF CONTENTS

ABOUT THE COMPANY

DRIFTING AND PRODUCTION DRILLING

- Drill Bits
- Drill Steel

TAPER TOOLS

EXTENSION EQUIPMENT

- MF Extension Rods
- Couplings

ADAPTERS

- Shank Rod Adapters
- Shank HLX1 Adapters
- Broach Adapters
- Spinning Adapters
- Male/Male Adapters

ROOF BOLTING

- Dolly Pushers

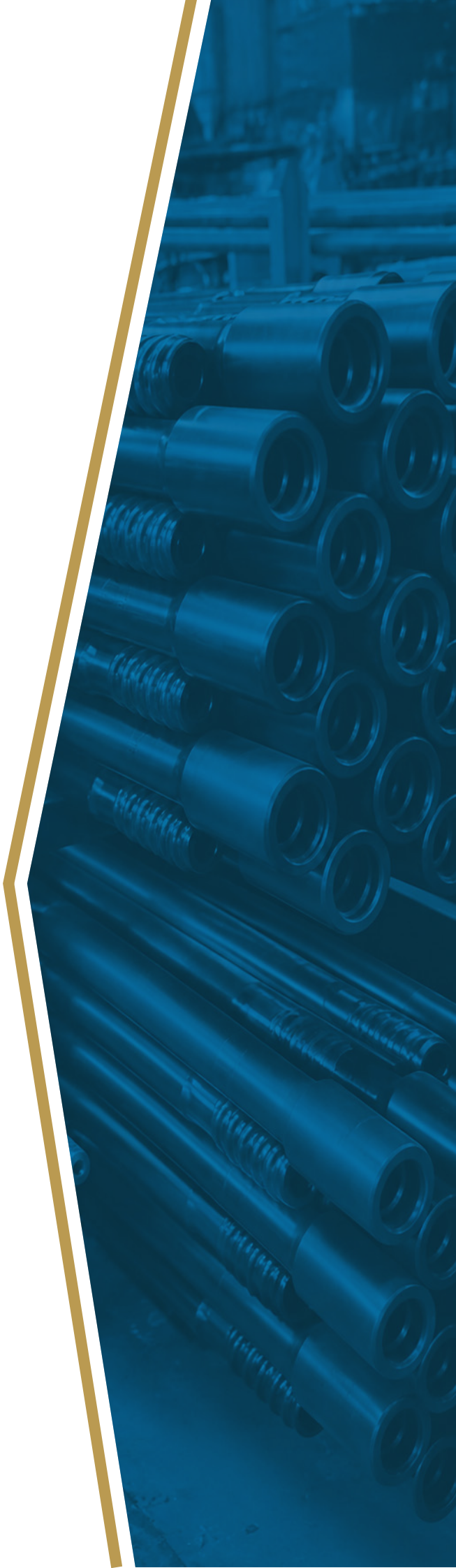



ABOUT THE COMPANY

Founded in **2014**, **Sampoko Consulting & Projects (Pty) Ltd** is a proudly South African company specializing in the supply and marketing of locally designed, developed, and manufactured **drilling consumables** for the mining and construction industries. Since its inception, the company has been committed to **delivering innovative**, **high-performance drilling solutions** that meet the demanding requirements of modern mining operations.



Our comprehensive range of **drilling and extension tools** is engineered by a team of experienced professionals who are passionate about designing and manufacturing products that offer exceptional performance, reliability, and longevity. By combining advanced engineering principles with stringent **quality control processes**, we ensure that every product meets the **highest industry standards** while providing outstanding value to our customers.

Sampoko is a **100% South African Black-Owned** and managed company, dedicated to supporting local industry and contributing to the country's economic growth. We proudly source our **raw materials** from **South African suppliers**, while our heat treatment processes, manufacturing partners, and waste management services are all provided by locally based businesses. This commitment not only strengthens our local supply chain but also promotes sustainable economic development and job creation within South Africa.

DRIFTING AND PRODUCTION DRILLING

Drill Bits
Drilling for Drifting, Bolting and Blasting

Specifications relating to:

- Bit sizes(mm): 33 - 76
- Thread: R25, R28, R32
- Dimensions
- Body type
- Button configuration
- Water flushing
- Sludge flushing
- Hardened and tempered

Outcomes from innovative design:

- Rapid penetration due to improved design.
- Improved strike face ensures even percussion.
- Button configuration decreases pressure on drill rods.
- Quicker sludge removal due to enhanced flushing holes.

Order Code	Size mm	Thread	No. Outside Button	No. Inside Button	Water Holes	Carbide Button Shape	Gauge Angle
STD R25 – 33 SB	33	R25	6	2	4	SB	35°
STD R28 – 38 SB	38	R28	6	3	6	SB/D	35°
STD R32 – 43 SB	43	R32	6	3	6	SB/D	35°
STD R32 – 45/5 SB	45	R32	6	3	5	SB/D	35°
STD R32 – 45 SB	45	R32	6	3	6	SB/D	35°
STD R32 – 48/5 SB	48	R32	6	3	5	SB/D	35°
STD R32 – 48 SB	48	R32	6	3	6	SB/D	35°
STD R32 – 51/5 SB	51	R32	6	3	5	SB/D	35°
STD R32 – 51 SB	51	R32	6	3	6	SB/D	35°
STD R32 – 64/5 SB	64	R32	8	4	5	SB/D	35°
STD R32 – 64 SB	64	R32	8	4	6	SB/D	35°
STD R32 – 76/5 SB	76	R32	8	4	5	SB/D	35°
STD R32 – 76 SB	76	R32	8	4	6	SB/D	35°

- For Semi Ballistic or Dome Button shape in face and on dex add **SB** or **D** respective behind order code.
- All drill bits are hardened and tempered.

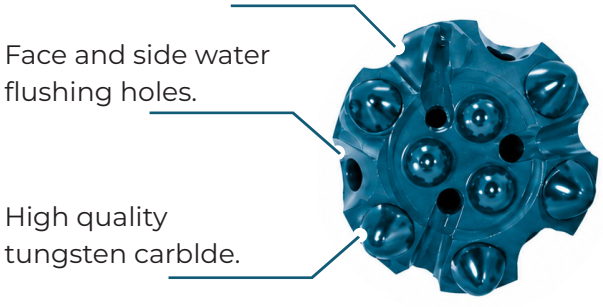



DRIFTING AND PRODUCTION DRILLING

Drill Bits
Drilling for Drifting, Bolting and Blasting

- **Specifications relating to:**
  - Bit sizes(mm): 36 - 38
  - Thread: ST22*, ST25* (Patented product)
  - Dimensions
  - Body type
  - Button configuration
  - Water flushing
  - Sludge flushing
  - Hardened and tempered

Outcomes from innovative design:

- Rapid penetration due to improved design.
- Improved strike face ensures even percussion.
- Button configuration decreases pressure on drill rods.
- Quicker sludge removal due to enhanced flushing holes.

Order Code	Size mm	Thread	No. Outside Button	No. Inside Button	Water Holes	Carbide Button Shape	Gauge Angle
STP ST22 – 36 SB	36	ST22	5	2	3	SB	35°
STP ST22 – 38 SB	38	ST22	5	2	3	SB	35°

- For Semi Ballistic or Dome Button shape in face and on dex add **SB** or **D** respective behind order code.

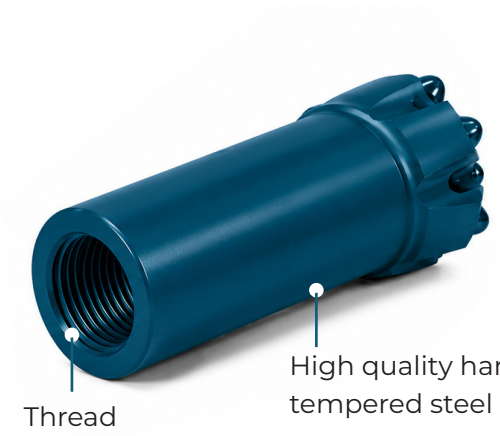



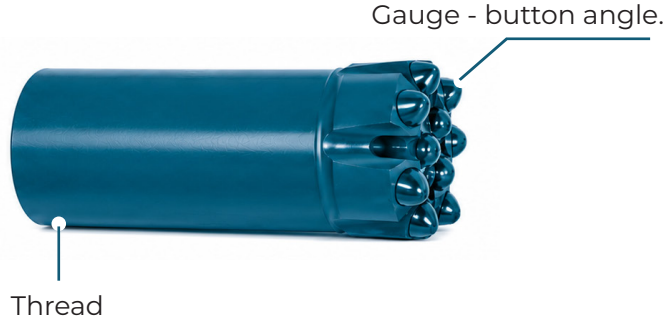

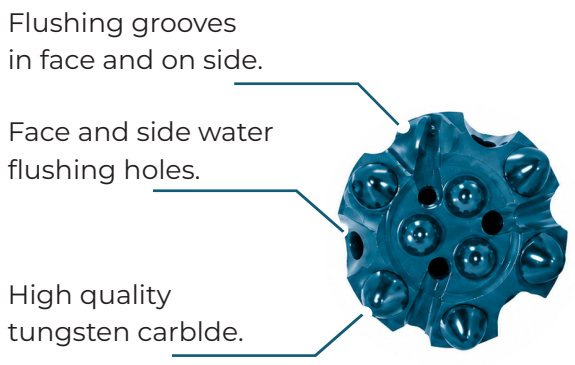

DRIFTING AND PRODUCTION DRILLING

Drill Steel

Drilling for Drifting, Bolting and Blasting

Drifting Drill Steel are for top-hammer production drilling in mining, tunnelling, bench drilling, drifting, long-hole drilling, construction and quarry work.

Two ends threads can be used for connecting couplings, shanks, or bits. Typically two ends of extension rods are male-male (MM Rod), while sometime one end is male and another one is female (M/F Rod). Drifting tunnelling drill rod, same as extension rods, our all drifting & tunnelling rods are produced by CNC machining and advanced heat treatment on the base of the same steels as well-known brand.

Adavantage :

1. Made from the same steels as as internationally well-known brand. .
2. CNC machining and advanced heat threatment .
3. We can supply full range of the Hexagonal and Round drill rods .
4. Shape once of whole heat-treatment ensures long lifespan

- Full range of the hexagonal drill rods as below.
- Thread size: R22, R25, R28, SSR28, R32, SSR32, R35, SSR35, R38, T38, other.
- Rod size: Hex.22, Hex.25, Hex.28, Hex.32, Hex.35.
- Length: 2100mm to 6095mm.
- Thread Type: R22, R25, R28, R32, R38, T38, T45, T51 threads, and different lengths of rods are available from 600mm to 6400mm.

“R” Thread	“T” Thread
(R25)  1” Dia Thread Pitch .500” (2 Threads Per inch)	(T38)  38mm 1-1/2” Dia Thread Pitch .610”
(R32)  1-1/4” Dia Thread Pitch .500” (2 Threads Per inch)	(T45)  45mm 1-3/4” Dia Thread Pitch .735”
(R38)  1-1/2” Dia Thread Pitch .500” (2 Threads Per inch)	(T51)  51mm 2” Dia Thread Pitch .790”

DRIFTING AND PRODUCTION DRILLING

Drill Steel
Drilling for Drifting, Bolting and Blasting

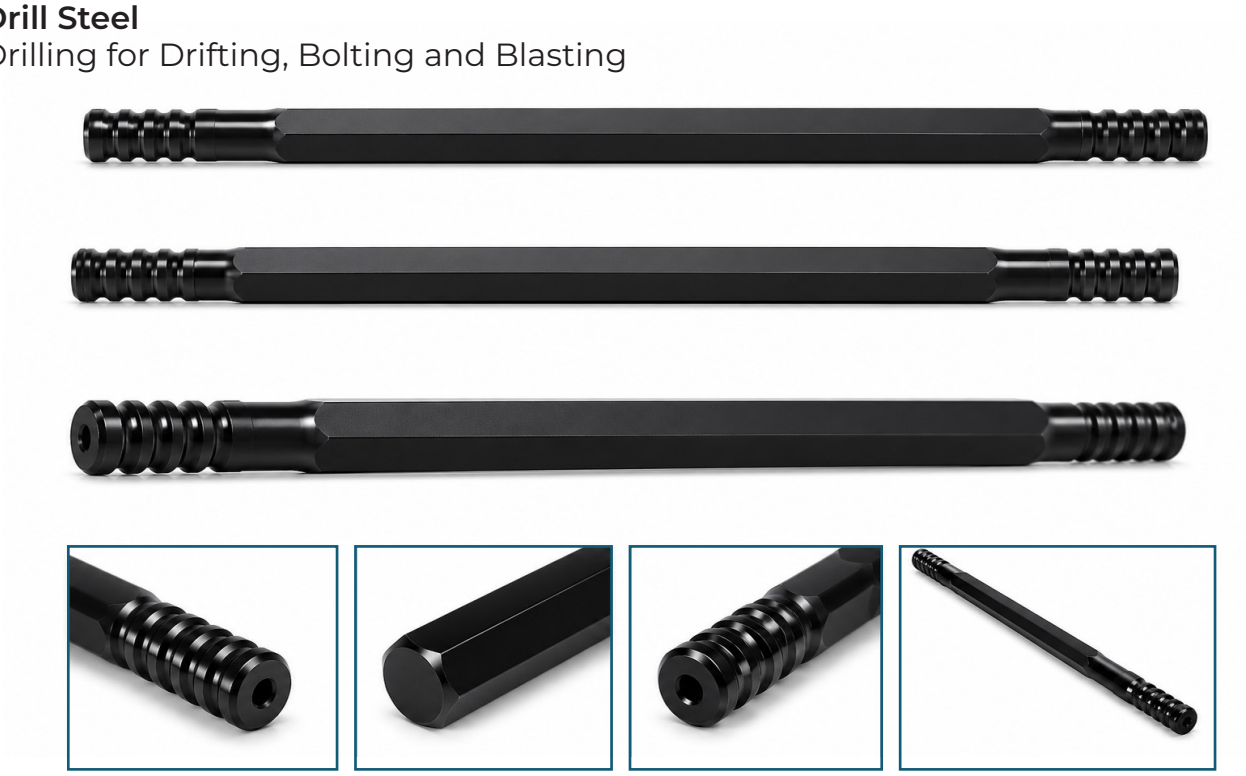

Processes of Rod Manufacturing

All Our drill rods are fully carburized with an advanced heat treatment, combinated with phosphorization.

MM Drill Rod Hex Type Color

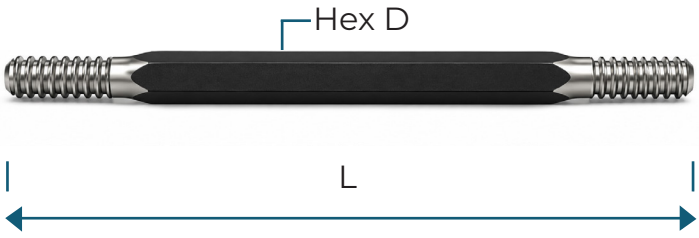

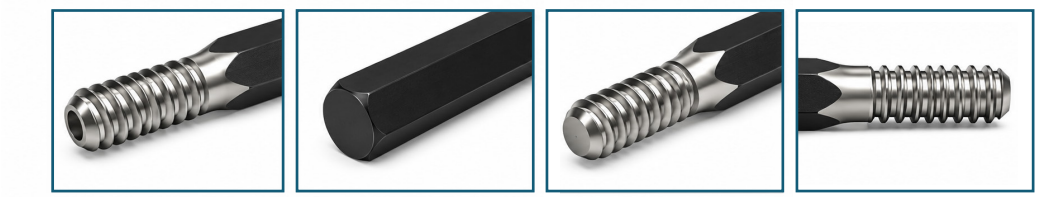

TAPER TOOLS

Taper Drill Bits
Small Hole Drilling - H22

Specifications relating to:

- Bit sizes (mm): 32 - 38
- Taper: 7°
- Dimensions
- Body type
- Button configuration
- Water flushing
- Sludge flushing
- Hardened and tempered

Order Code	Size mm	Taper	No. Outside Button	No. Inside Button	Face Water Holes	Gauge Water Holes	Gauge Angle
SH22TPB-32-7-7B-7	32	7°	2x7	5x7	2x5	1x5	40°
SH22 TPB-33-7-7B-7	33	7°	2x8	5x7	2x4	1x4	40°
SH22TPB-35-7-7B-7/8	35	7°	2x9	5x8	2x4	1x5	40°
SH22TPB-38-7-7B-7/8	38	7°	2x10	5x8	2x4	1x6	35°

- For Semi Ballistic or Dome Button shape add **SB** or **D** respective behind order code. All drill bits are hardened and tempered.
- For a **long skirt** start the code witha **L**.

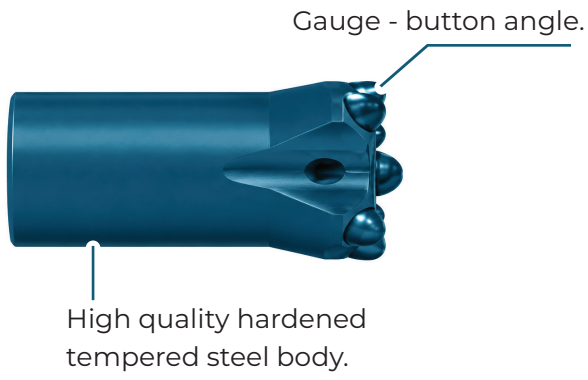

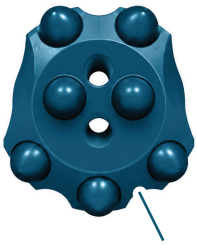
Face and side water flushing holes.


Semi Ballistic


Dome

TAPER TOOLS

Taper Drill Bits
Small Hole Drilling - H22/H25

- **Specifications relating to:**

- Bit sizes (mm): 32 - 40
- Taper: 11°
- Dimensions
- Body type
- Button configuration
- Water flushing
- Sludge flushing
- Hardened and tempered

Order Code	Size mm	Taper	No. Outside Button	No. Inside Button	Face Water Holes	Gauge Water Holes	Gauge Angle
SH22TPB-32-11-5B-8/9	32	11°	2x8	3x9	1x6	2x8	40°
SH22TPB-34-11-5B-8/9	34	11°	2x8	3x9	1x6	2x8	40°
SH22TPB-32-11-7B-7	32	11°	2x7	5x7	1x5	1x5	40°
SH22TPB-35-11-7B-7/8	35	11°	2x7	5x8	1x5	1x5	40°
SH22TPB-36-11-7B-7/8	36	11°	2x7	5x8	1x5	1x5	35°
SH22TPB-38-11-7B-7/8	38	11°	2x7	5x8	1x5	1x5	35°
SH22TPB-40-11-7B-8/9	40	11°	2x8	5x8	1x6	1x6	35°

- For Semi Ballistic or Dome Button shape add **SB** or **D** respective behind order code. All drill bits are hardened and tempered.
- For a **long skirt** start the code witha **L**.



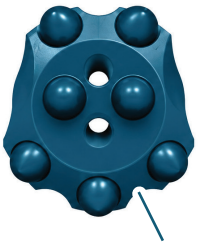

Face and side water flushing holes.

TAPER TOOLS

Taper Drill Bits
Small Hole Drilling - H22

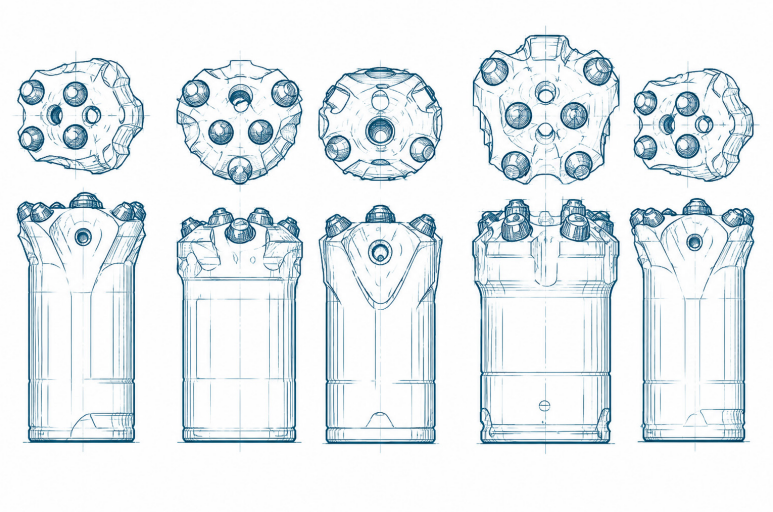

Specifications relating to:

- Bit sizes (mm): 28 - 38
- Taper: 12°
- Dimensions
- Body type
- Button configuration
- Water flushing
- Sludge flushing
- Hardened and tempered

Order Code	Size mm	Taper	No. Outside Button	No. Inside Button	Face Water Holes	Gauge Water Holes	Gauge Angle
SH22TPB-28-12-5B-7	28	12°	1x7	4x7	1x5	1x5	35°
SH22TPB-30-12-5B-7	30	12°	1x7	4x7	1x5	1x5	35°
SH22TPB-32-12-7B-7	32	12°	2x7	5x7	1x5	1x4	40°
SH22TPB-35-12-7B-7/8	35	12°	2x7	5x8	2x4	1x4	40°
SH22TPB-38-12-7B-7/9	38	12°	2x7	5x9	2x4	1x4	40°
SH22TPB-33-12-7B-7	33	12°	2x7	5x7	2x4	1x4	40°
SH22TPB-35-12-7B-7/8	35	12°	2x7	5x8	2x4	1x4	35°
SH22TPB-33-12-7B-7Z	33	12°	2x7	5x7	1x4	1x6	35°
SH22TPB-35-12-7B-7Z	35	12°	2x7	5x7	1x5	1x5	35°
SH22TPB-33-12-8B-7	33	12°	2x7	6x7	2x4	1x4	40°

- For Semi Ballistic or Dome Button shape add **SB** or **D** respective behind order code. All drill bits are hardened and tempered.
- For a **long skirt** start the code witha **L**.

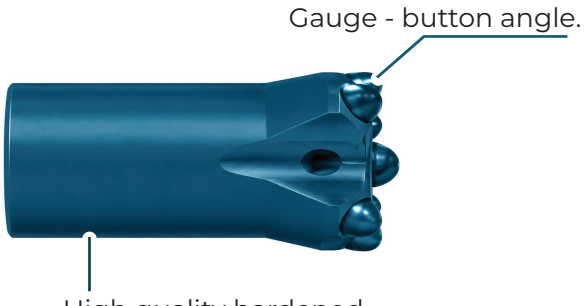

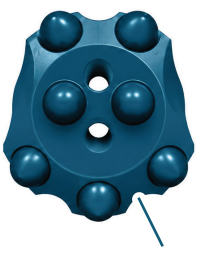

BOLTING EXTENSION EQUIPMENT

Extension Rods

MF Extension Rods - Threaded & Taper

- **Specifications relating to:**

- Rod lengths (m): 0.5 - 1.5
- Thread, Taper: ST22*, ST25*, 11° & 12°
- Dimensions
- Body type
- Tensile Properties
- Hardened and Tempered

Order Code	Thread Taper (a)	Thread Taper (b)	Thread(a) Male (M)	Thread(b) Female (F)	Hex (H)	Length (L), mm	Through Water Hole
H22 ST22 M/F - 050	ST22	ST22	M	F	22	0,50	YES
H22 ST22 M/F - 080	ST22	ST22	M	F	22	0,80	YES
H22 ST22 M/F - 090	ST22	ST22	M	F	22	0,90	YES
H22 ST22 TD11 - 090	11°/12°	11°/12°	M	F	22	0,90	YES
H22 ST22 M/F - 110	ST22	ST22	M	F	22	1,10	YES
H22 ST22 TD11 - 110	11°/12°	11°/12°	M	F	22	1,10	YES
H22 ST22 M/F - 150	ST22	ST22	M	F	22	1,50	YES
H22 ST22 TD11 - 150	11°/12°	11°/12°	M	F	22	1,50	YES

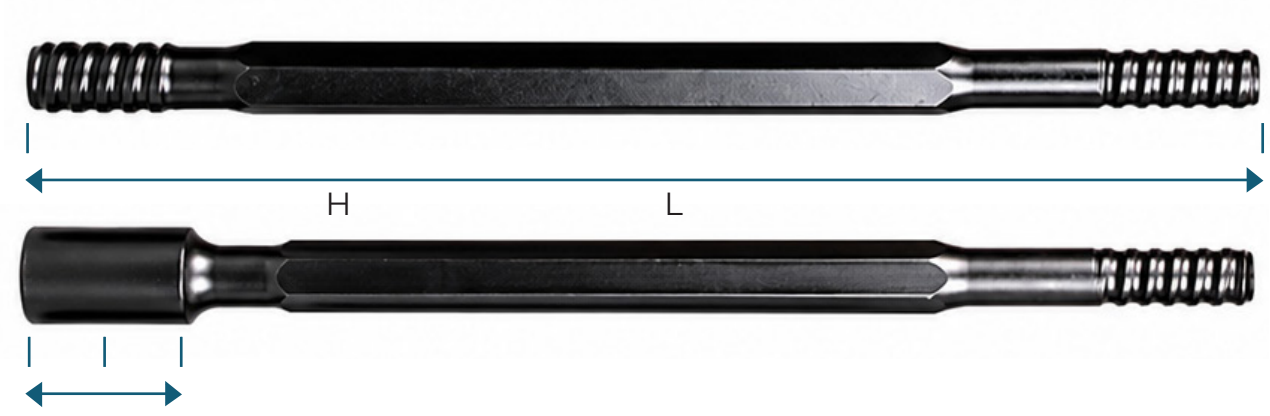

- Taper Rods can be ordered as **TD11** or **TD12** depending on Taper bit degree.
- All rods can be ordered as Hex (H) 25mm. Replace H22 with H25 in order code. H25 drill rods require.
- ST25 drill bits.

Extension Rods can be manufactured according to client specifications and variable lengths are available on request.

* The **ST22** and **ST25** thread is a patented product, and it is designed for use with an ST threaded drill rod. Please refer to ST drill rods.

BOLTING EXTENSION EQUIPMENT

Couplings

Roof Bolting - Coupling

Specifications relating to:

- Thread: ST22*, ST25%, R25, R28, R32, T38
- Dimensions
- Body type
- Tensile Properties
- Hardened and tempered

Order Code	Length (mm)	Diameter (D) mm	Thread(a) Female	Thread(b) Female	Through Water Hole
ST22 ST22 F/F 132C	132	31	ST22	ST22	YES
ST25 ST25 F/F 132C	132	31	ST25	ST25	YES
R25 R25 F/F 134C	134	32	R25	R25	YES
R28 R28 F/F 136C	136	36	R28	R28	YES
R32 R32 F/F 162C	162	40	R32	R32	YES
R32 R25 F/F 148C	148	40	R32	R25	YES

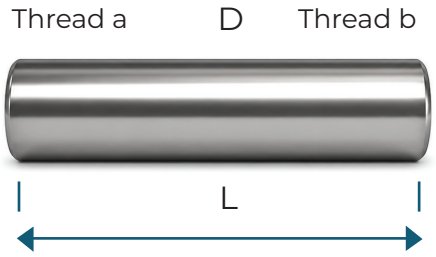

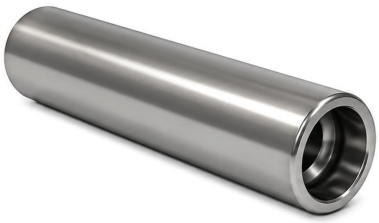

Couplings can be manufactured according to client specifications.

Above items are Sampoko Consulting & Projects (Pty) Ltd standard stock items.

* The **ST22** and **ST25** thread is a patented product, and it is designed for use with an ST threaded drill rod. Please refer to ST drill rods..

BOLTING EXTENSION EQUIPMENT

Shank Adapter
Shank Rod Adapters

- **Specifications relating to:**

- Thread: ST22*, ST25%*, R25, R28
- Hex (mm): 22, 25
- Dimensions
- Body type
- Tensile Properties
- Fully carburized

Order Code	Thread	Thread Male (M)	Hex (H)	Length (L)	Length (l)	Through Water Hole
108 FC H22 ST22 - 300	ST22	M	22	300	108	YES
108 FC H25 ST25 - 300	ST25	M	25	300	108	YES
108 FC H22 R25 - 300	R25	M	22	300	108	YES
108 FC H25 R25 - 300	R25	M	25	300	108	YES
108 FC H22 R28 - 300	R28	M	22	300	108	YES
108 FC H25 R28 - 300	R28	M	25	300	108	YES

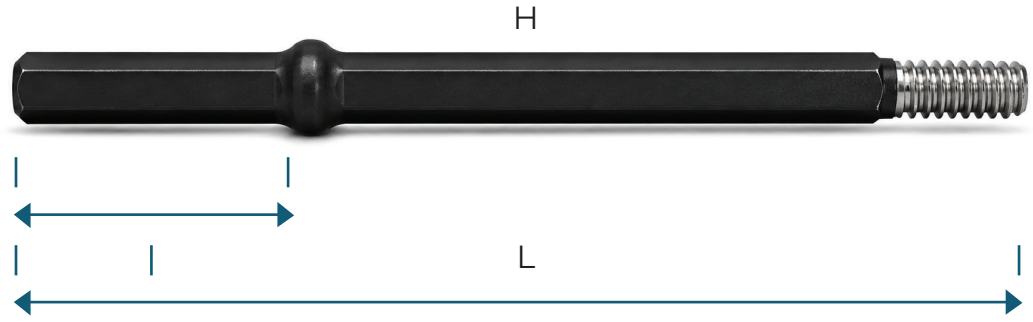

- Shank Adapters can be ordered with an 159mm Shank - replace 108 with 159 in order code.

Shank Rod Adapters can be manufactured according to client specifications and variable lengths are available on request.

* The **ST22** and **ST25** thread is a patented product, and it is designed for use with an ST threaded drill rod. Please refer to ST drill rods.

BOLTING EXTENSION EQUIPMENT

Shank Adapter
Shank - Adapters

Specifications relating to:

- Adapter thread: ST22*, ST25*
- Type: HLX 1
- Dimensions
- Body type
- Tensile Properties
- Fully carburized

Order Code	Thread	Spline (d) mm	Spline (d2) mm	Length (L) mm	Diameter (D) mm	Through Water Hole
SA ST22 HLX1	ST22	39	24	255	28	YES
SA ST25 HLX1	ST25	39	24	255	28	YES

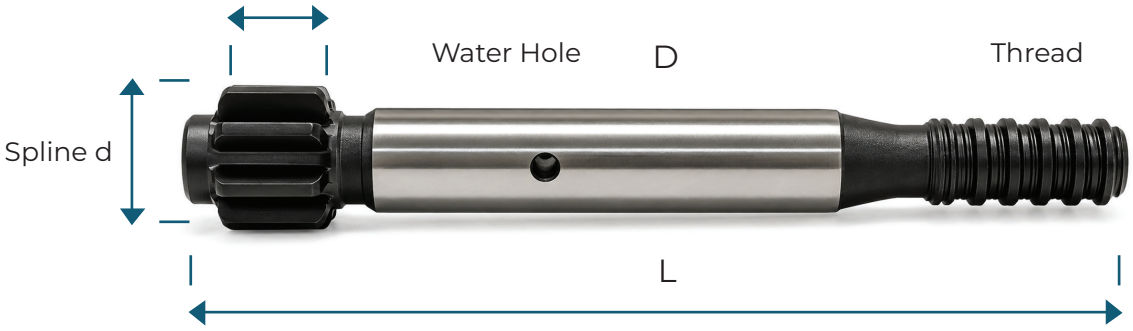



* The ST22 and ST25 thread is a patented product, and it is designed for use with an ST threaded drill rod. Please refer to ST drill rods.

BOLTING EXTENSION EQUIPMENT

Bolting Adapter
Roof Bolting - Broach Adapter

- **Specifications relating to:**

- Lengths (mm): 108
- Thread: ST22*, ST25* R32 (Patent product)
- Dimensions
- Body type
- Tensile Properties
- Hardened and tempered

Order Code	Length (mm)	Diameter (D) mm	Female Hex (H)	Thread Male	Through Water Hole
108 H22 ST22 280 BA	280	44	22	ST22	YES
108 H22 R32 280 BA	280	44	22	R32	YES

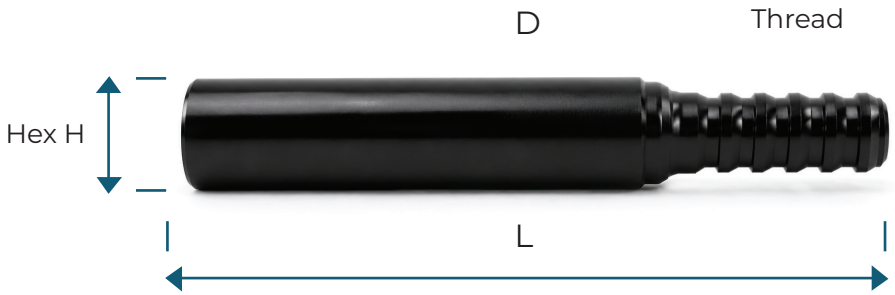





- Shank Adapters can be ordered with an 159mm Shank - replace 108 with 159 in order code.

Shank Rod Adapters can be manufactured according to client specifications and variable lengths are available on request.

* The **ST22** and **ST25** thread is a patented product, and it is designed for use with an ST threaded drill rod. Please refer to ST drill rods.

BOLTING EXTENSION EQUIPMENT

Bolting Adapter
Roof Bolting - Spinning Adapter

Specifications relating to:

- Lengths (mm): 300 - 500
- Thread: ST22*, ST25*, R32, T38
- Dimensions
- Body type
- Tensile Properties
- Hardened and tempered

Order Code	Length (mm)	Diameter (d) mm	Diameter (D) mm	Thread Male	Nut Size (Metric)
SA 300 ST22 M24	300	45	68	ST22	24
SA 300 R32 M24	300	45	68	R32	24
SA 300 T38 M24	300	45	68	R38	24
SA 400 ST22 M24	400	45	68	ST22	24
SA 400 R32 M24	400	45	68	R32	24
SA 400 T38 M24	400	45	68	R38	24
SA 500 ST22 M24	500	45	68	ST22	24
SA 500 R32 M24	500	45	68	R32	24
SA 500 T38 M24	500	45	68	T38	24

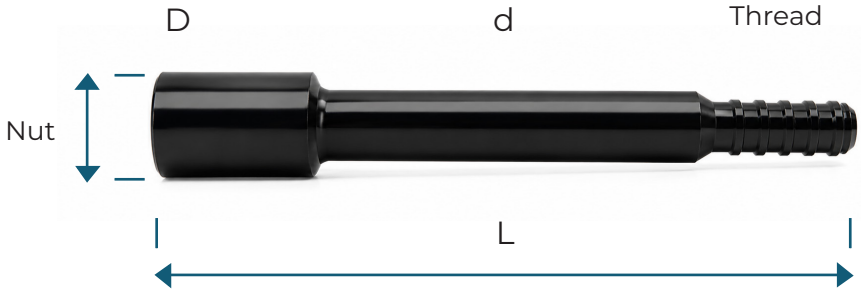





- **Replace M24 with either M32 , M36 or M38 for larger nut sizes**.

  * The **ST22** and **ST25** thread is a patented product, and it is designed for use with an ST threaded drill rod. Please refer to ST drill rods.

BOLTING EXTENSION EQUIPMENT

Bolting Adapter

Roof Bolting - Male / Male Adapter

- **Specifications relating to:**

- Thread: ST22*, ST25*, R25, R28, R32, T38
- Dimensions
- Body type
- Tensile Properties
- Hardened and tempered

Order Code	Length (mm)	Diameter (D) mm	Thread(a) Male	Thread(b) Male	Through Water Hole
R32 ST22 M/M 146SA	146	40	R32	ST22	YES
R32 ST25 M/M 162SA	162	40	R32	ST25	YES
R32 T38 M/M 178SA	178	42	R32	T38	YES

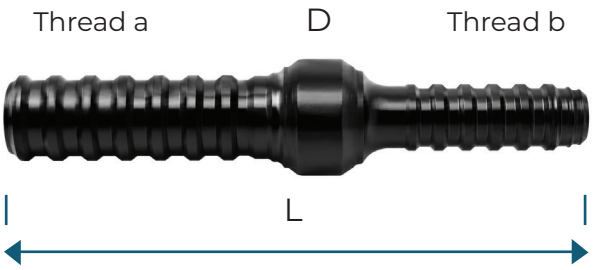



Male/Male Adapters can be manufactured according to client specifications and variable adapters are available on request.

* The **ST22** and **ST25** thread is a patented product, and it is designed for use with an ST threaded drill rod. Please refer to ST drill rods.

BOLTING EXTENSION EQUIPMENT

Bolting Dolly Pusher
Roof Bolting - Dolly Pusher

Specifications relating to:

- Lengths (mm): 280
- Shank: 108, 159
- Dimensions
- Body type
- Tensile Properties
- Hardened and tempered

Order Code	Length (L)	Shank length (l)	Diameter (D)	Diameter (d)	Diameter (d1)	Length (l1)	Length (l2)
108 H22 280 DP	280	108	49	22	25.5	25	25
108 H25 280 DP	280	108	49	25	25.5	25	25

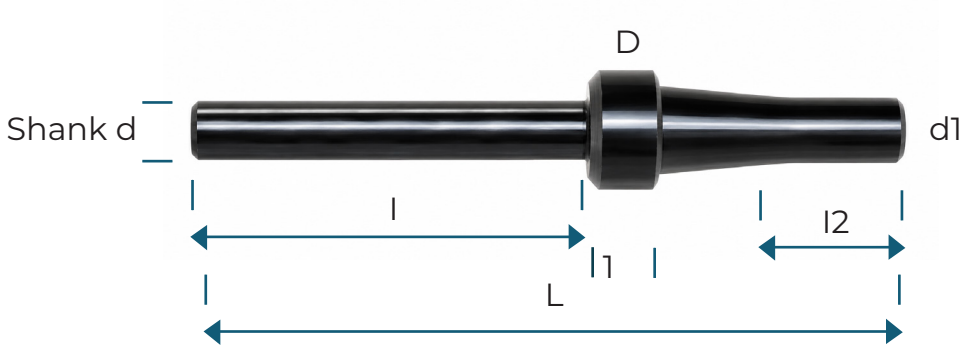



- Dolly Pushers can be ordered with a 159mm Shank - replace 108 with **159 in order code.**
  Dolly Pushers can be manufactured according to client specifications.

BOLTING EXTENSION EQUIPMENT

Bolting Dolly Pusher
Roof Bolting - Dolly Pusher

- **Specifications relating to:**

- Thread: ST22*, ST25%*, R25, R28, R32, T38
- Dimensions
- Body type
- Tensile Properties
- Hardened and tempered

Order Code	Length (mm)	Diameter (D) mm	Diameter (D1) mm	Diameter (D2) mm	Thread	Taper (d)	Through water hole
DP 230 R32 STD	230	40	60	60	R32	STD	YES
DP 230 T38 STD	230	40	60	60	T38	STD	YES
DP 700 T38 STD	700	40	60	60	T38	STD	YES
DP 800 T38 STD	800	40	60	60	T38	STD	YES

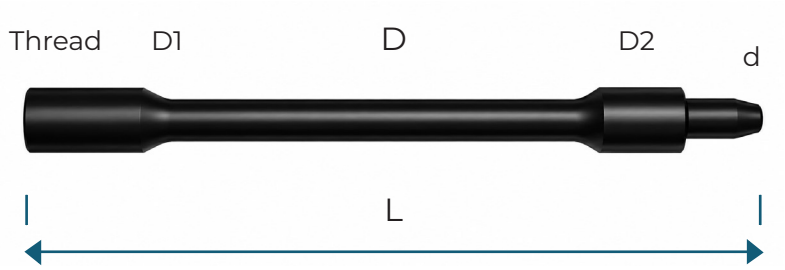



Dolly Pushers can be manufactured according to client specifications.



CONTACT US

+27(0) 78 943 4814

+27(0) 86 409 0444

INFO@SAMPOKO.CO.ZA

WWW.SAMPOKO.CO.ZA

NO. 271 SEKGATLENG SECTION
SANDFONTEIN, SAULSPOORT
RUSTENBURG
0318

SAMPOKO
CONSULTING & PROJECTS

FOLLOW US ON

R.S.A ORIGIN

© 2026 SAMPOKO GROUP